d-flexx

GOLF DFRE1-4

2 x DFRE1

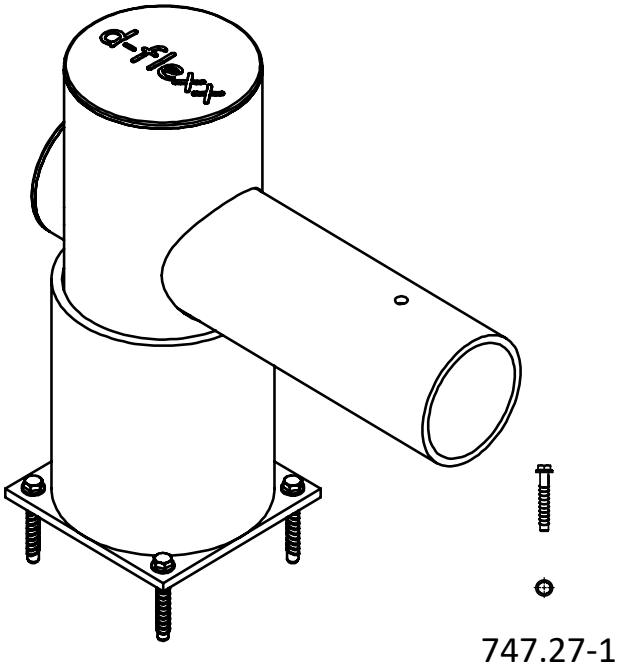

747.27-1

2500 mm

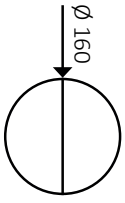

77021 x 1

71031 x 2

71032 x 2

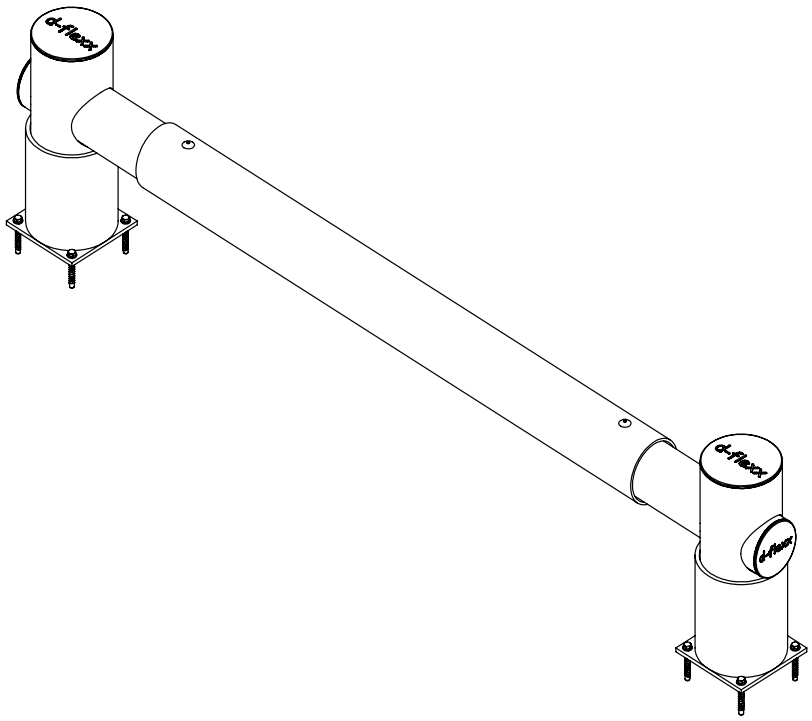

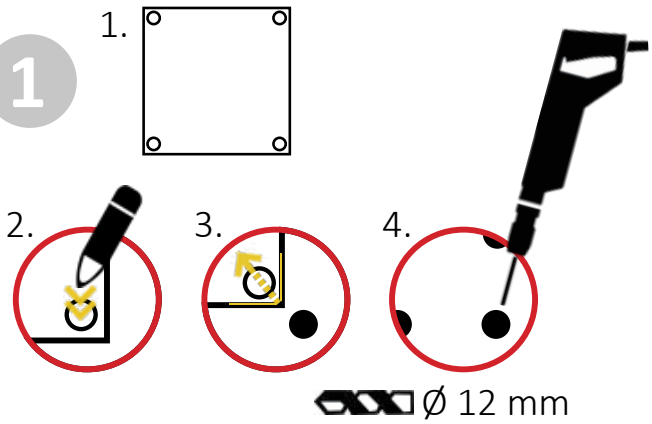
1
1.
2.
3.
4.
Ø 12 mm

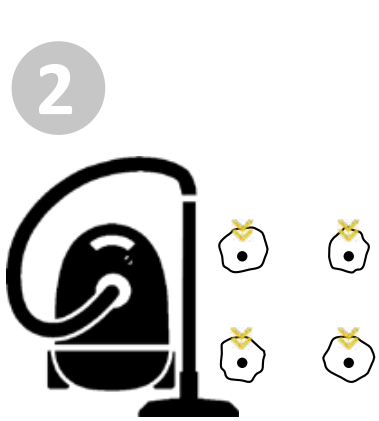
2

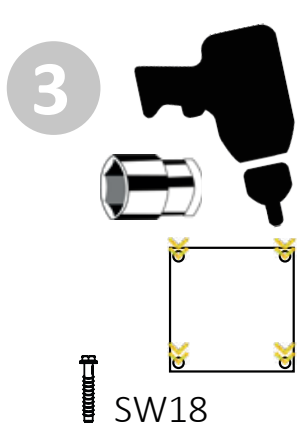
3
SW18

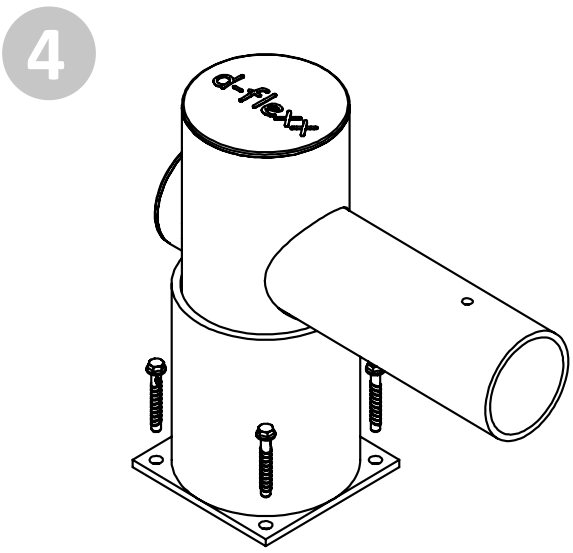
4

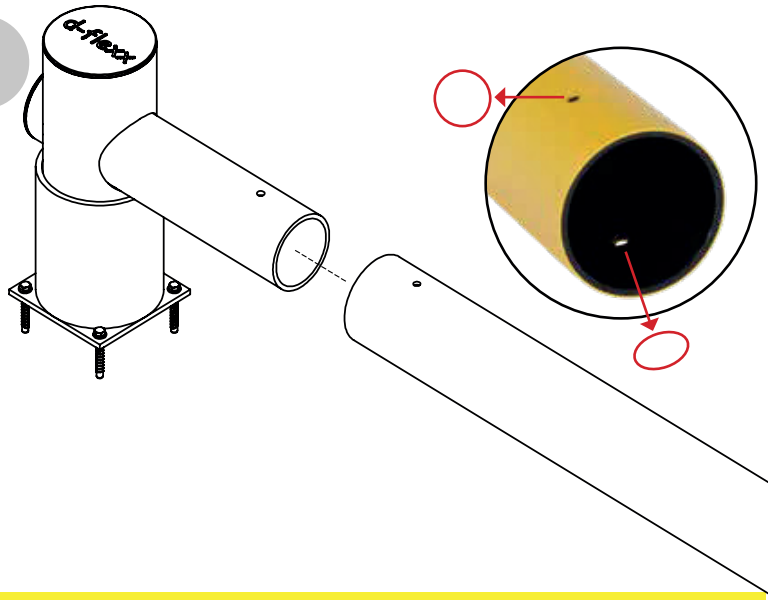
5

6

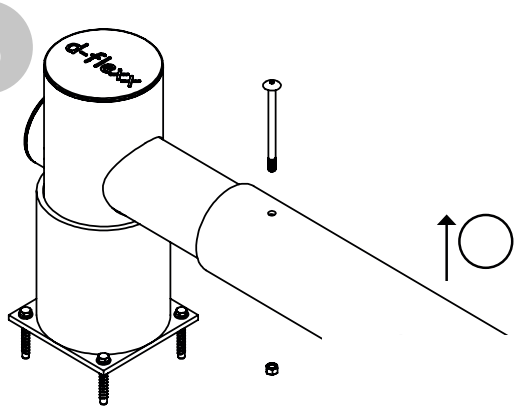

7

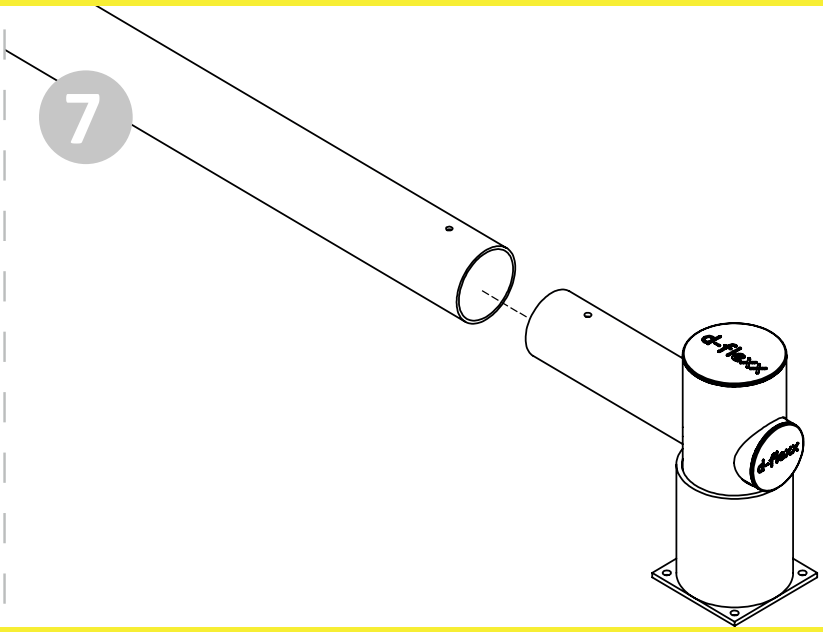

8

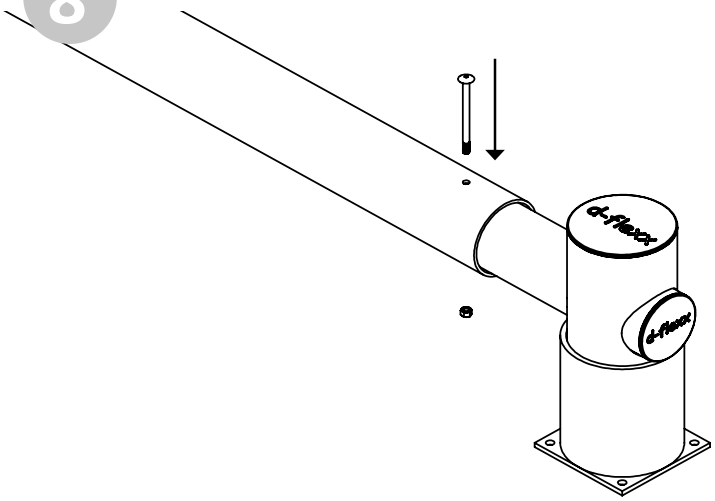
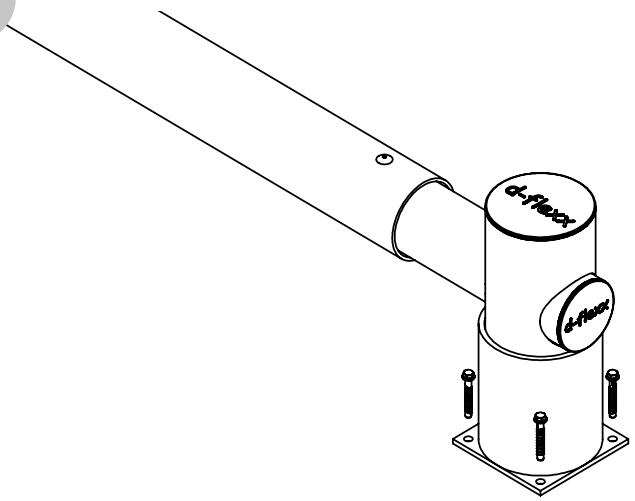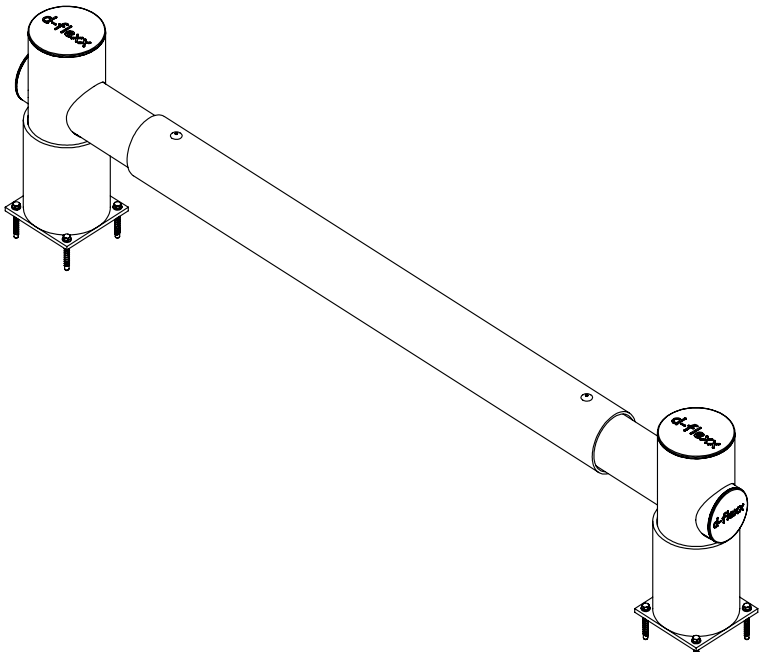
9